[Engine Compartment]

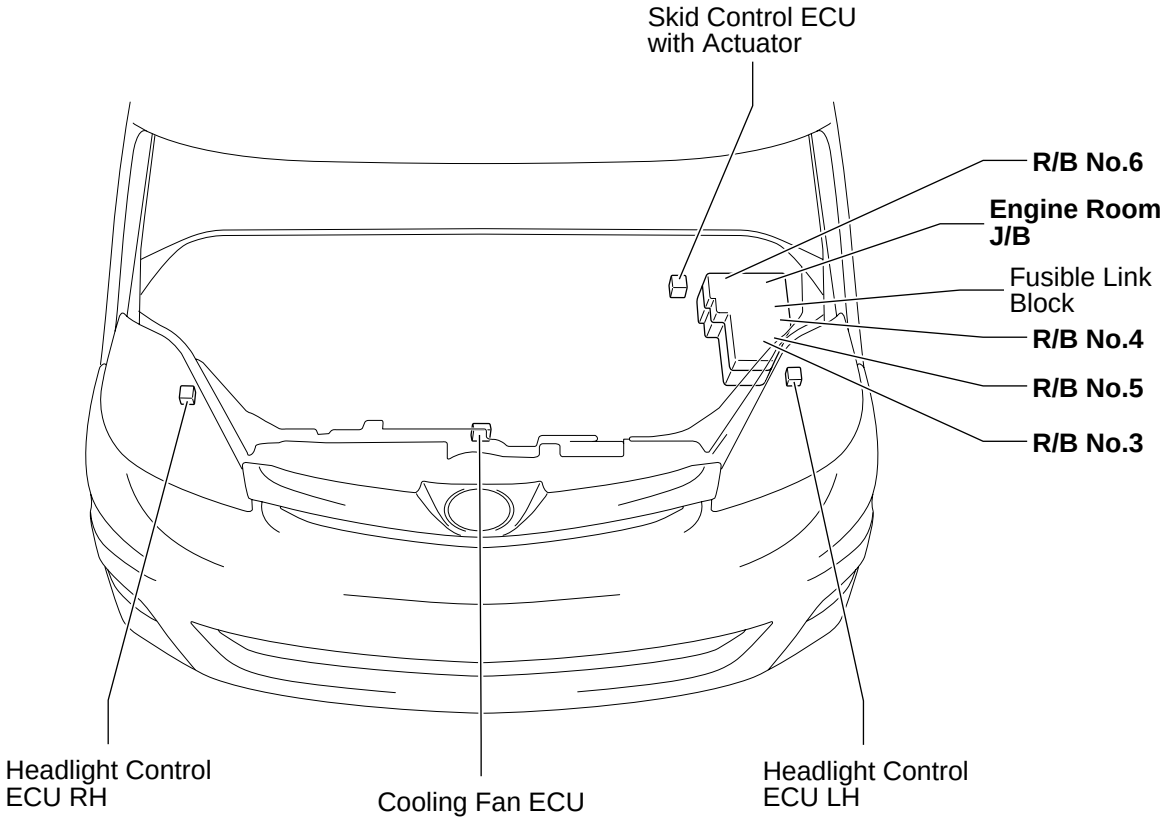

[Instrument Panel]

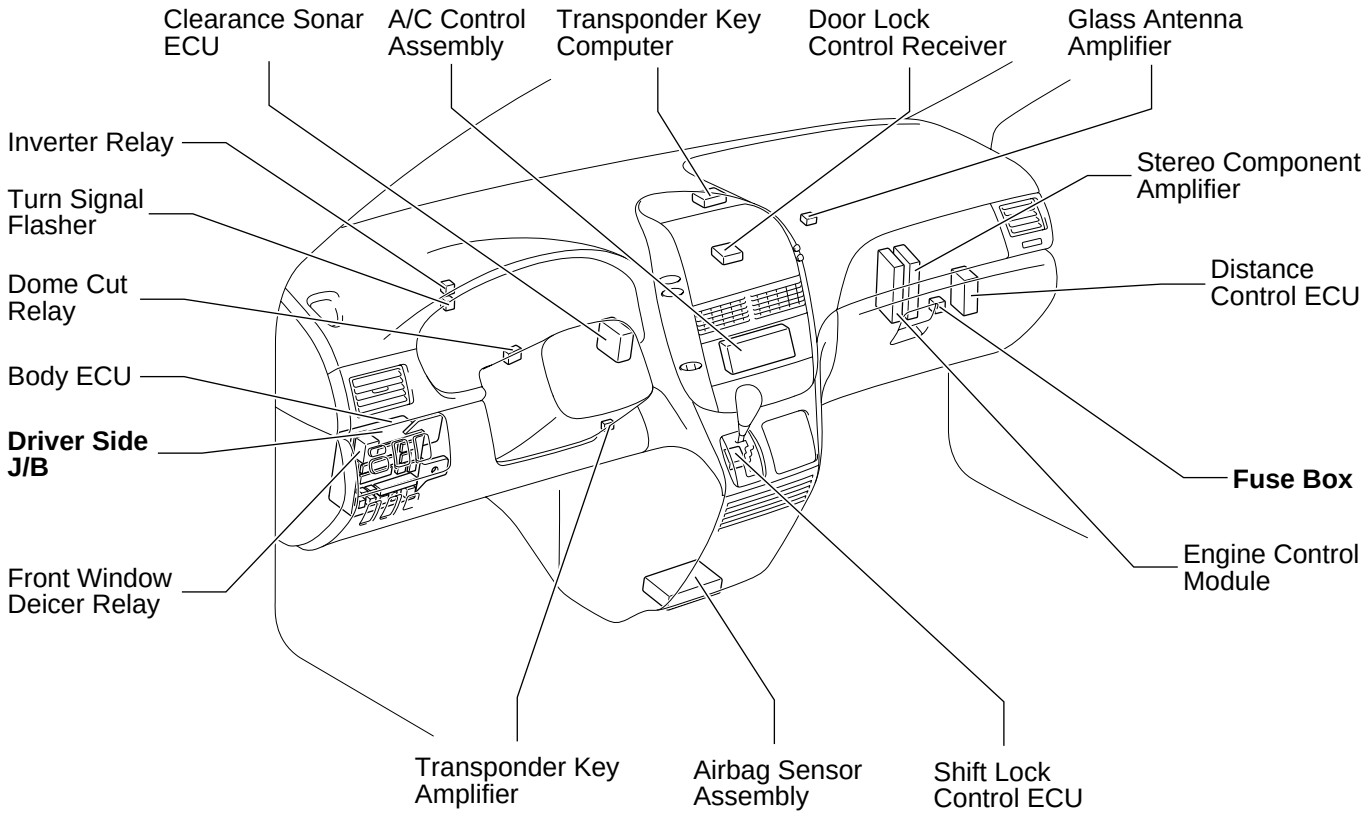

[Body]

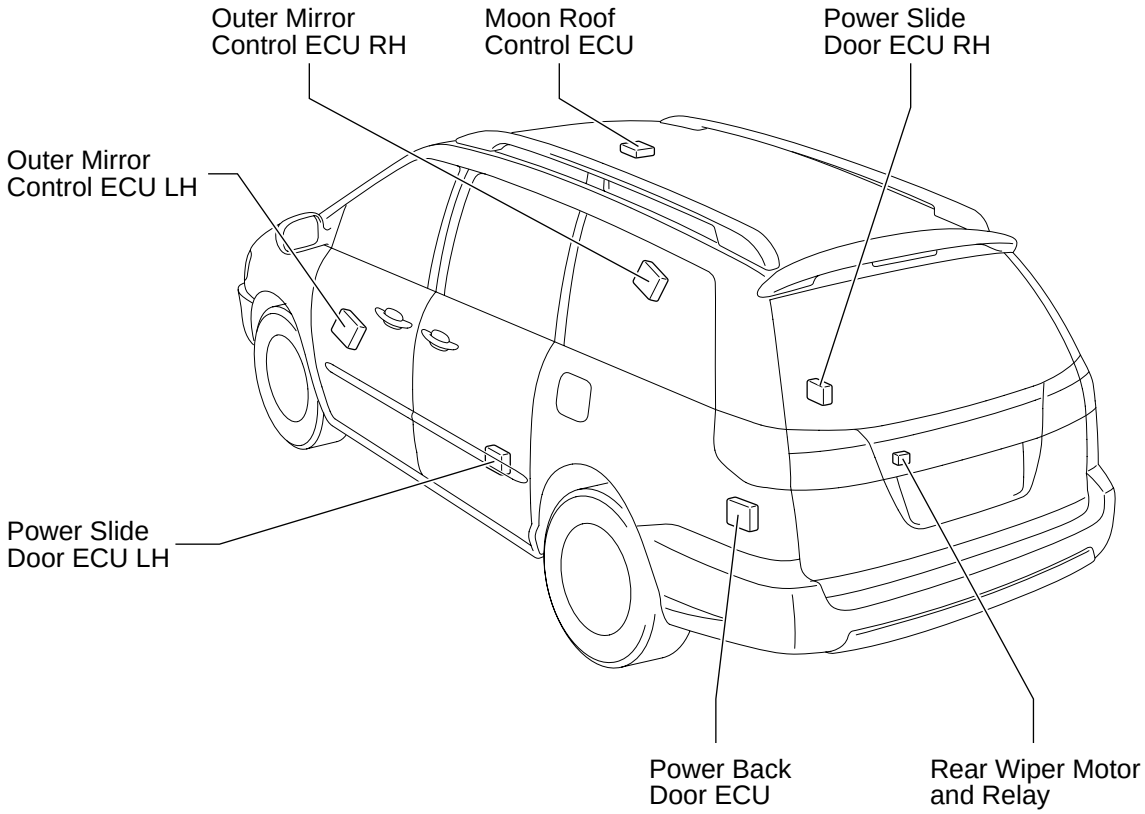
Outer Mirror
Control ECU RH
Moon Roof
Control ECU
Power Slide
Door ECU RH
Outer Mirror
Control ECU LH
Power Slide
Door ECU LH
Power Back
Door ECU
Rear Wiper Motor
and Relay

[Front Seat]

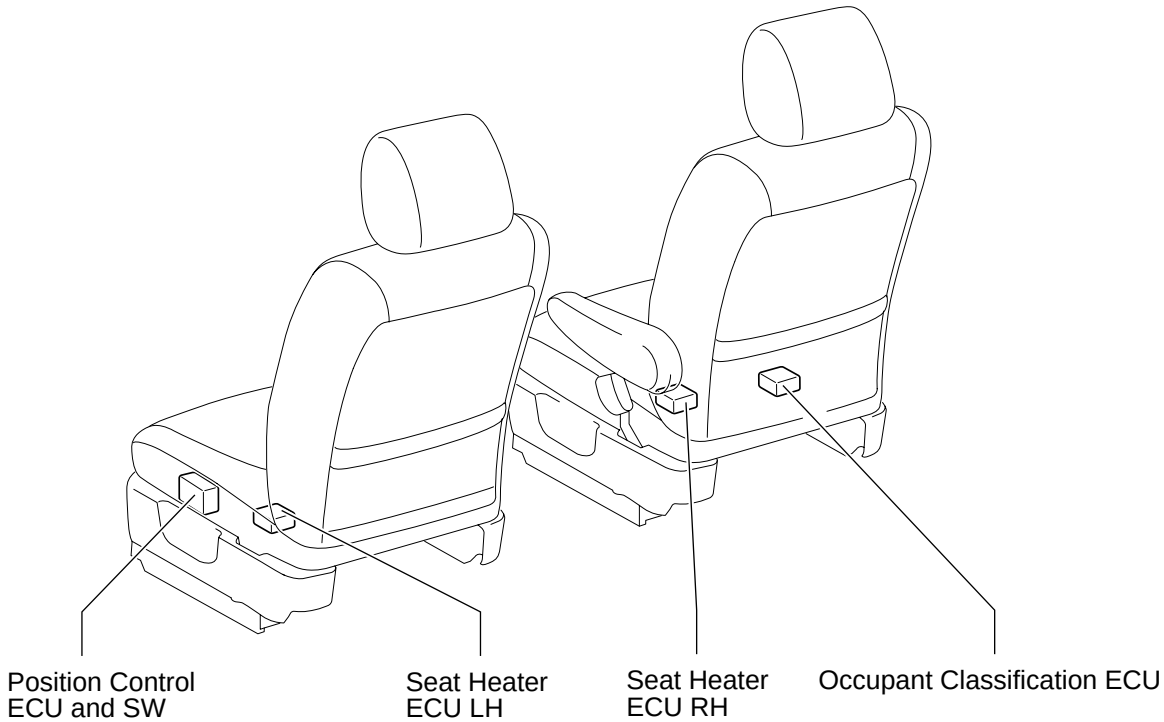

[Rear No.2 Seat]

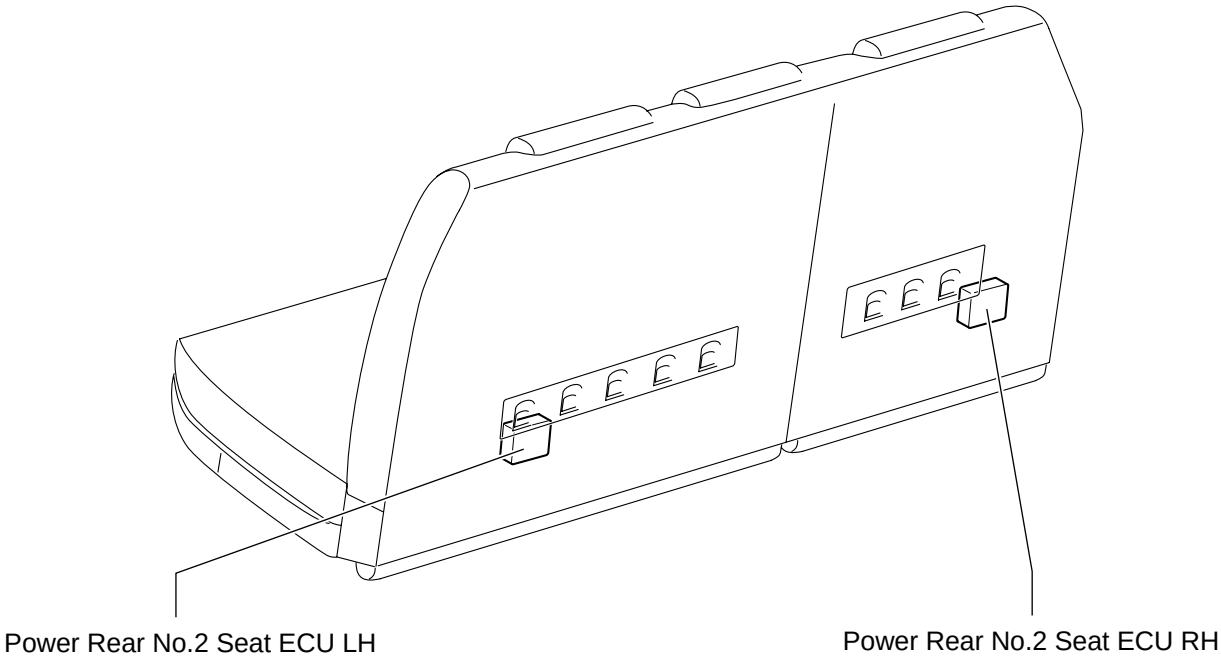

F RELAY LOCATIONS

: Engine Room J/B	Engine Compartment Left (See Page 20)

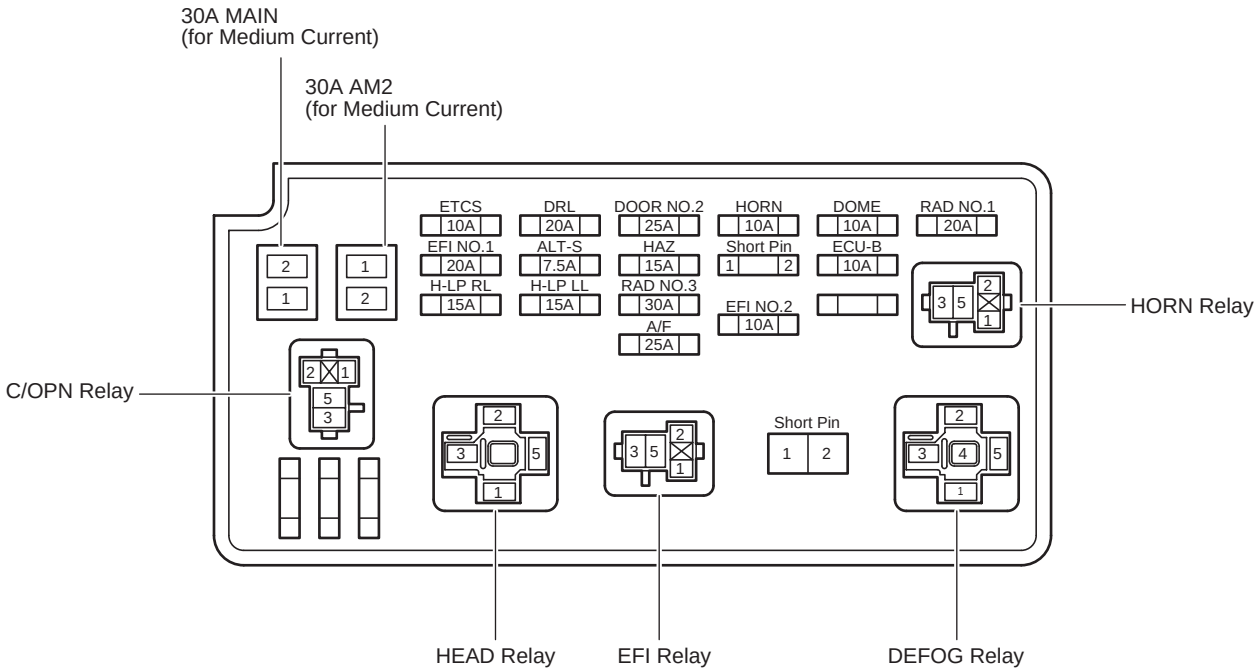

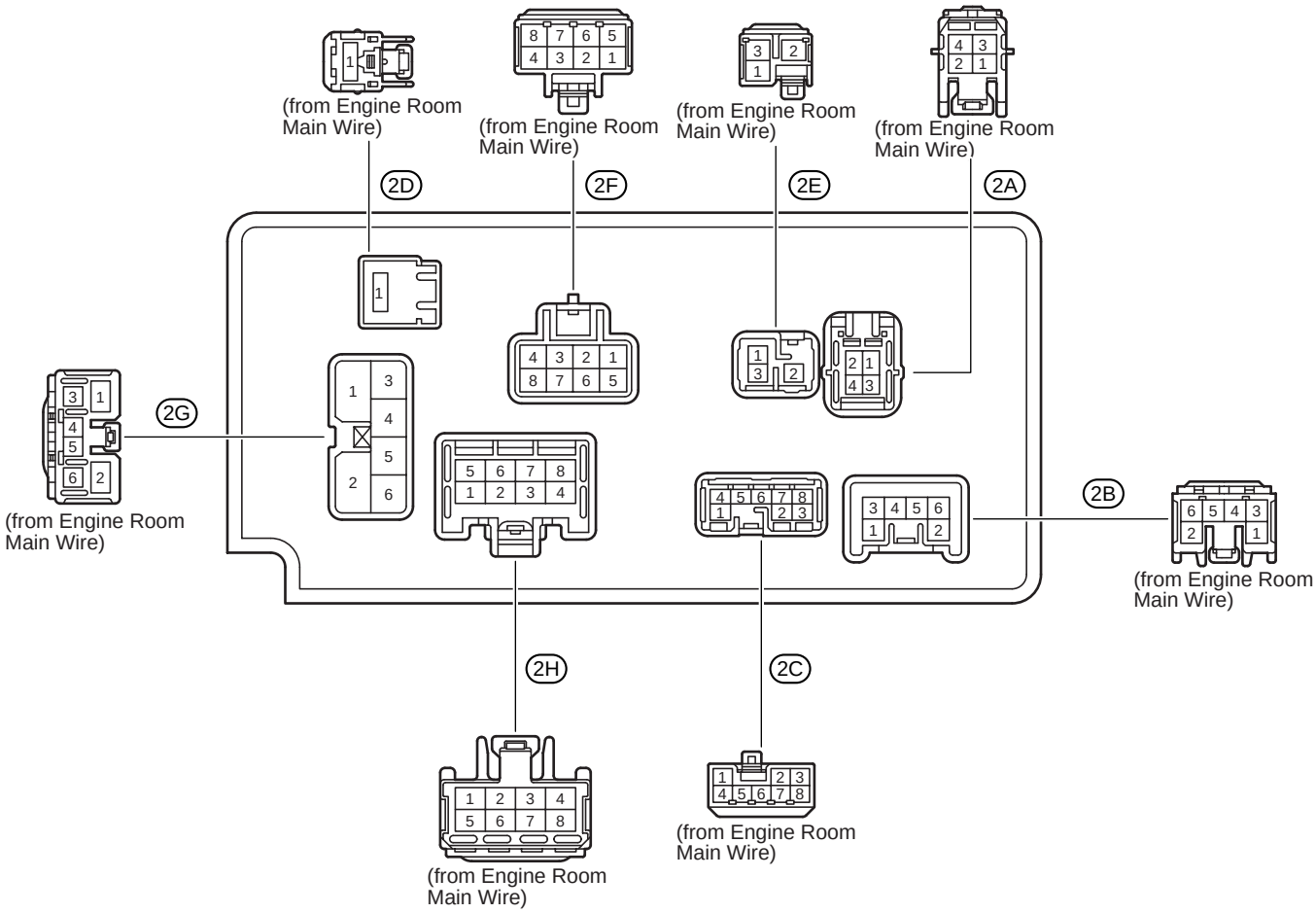

[Engine Room J/B Inner Circuit]

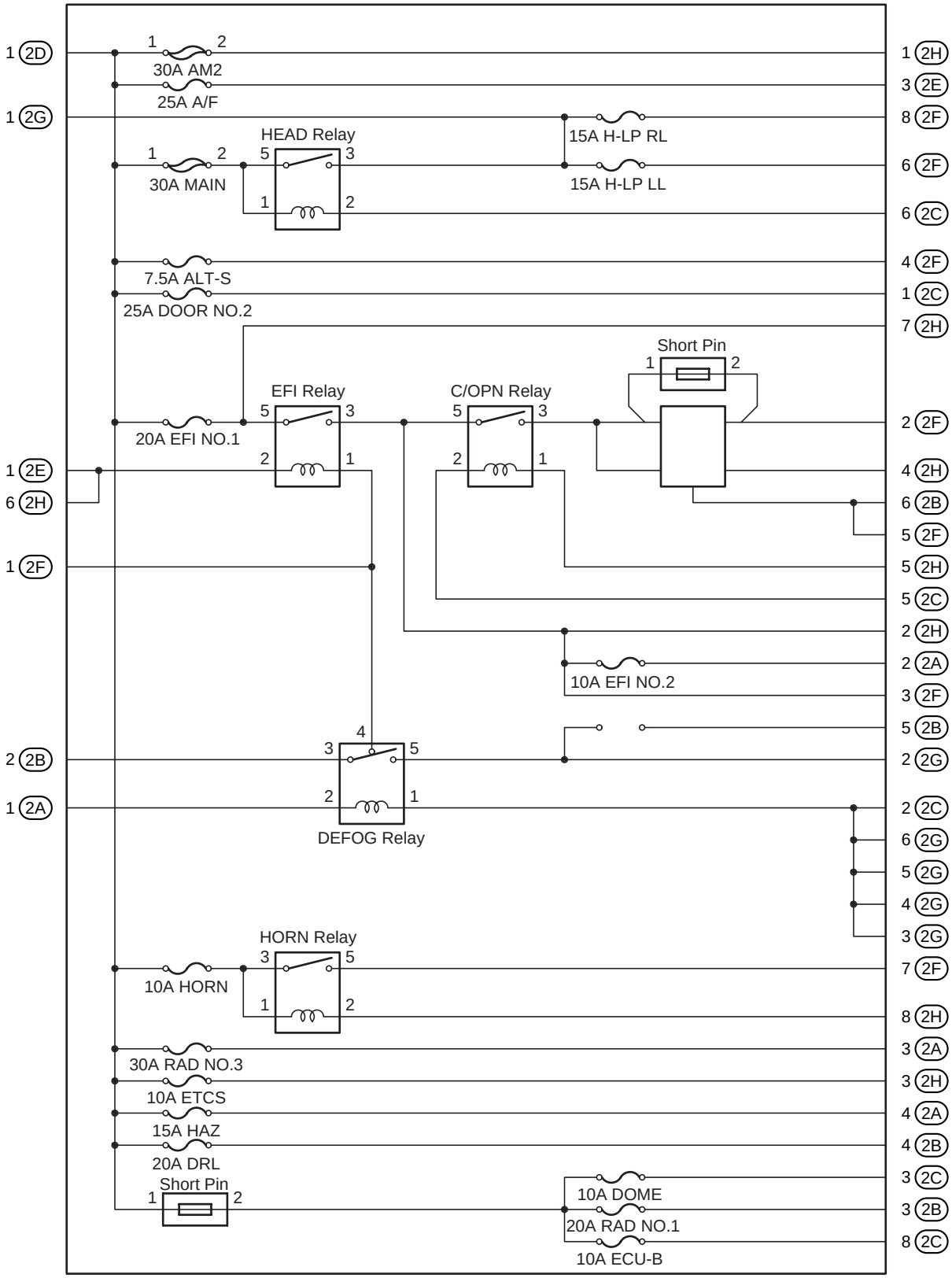

③ : R/B No.3	Engine Compartment Left (See Page 20)

(Automatic A/C)

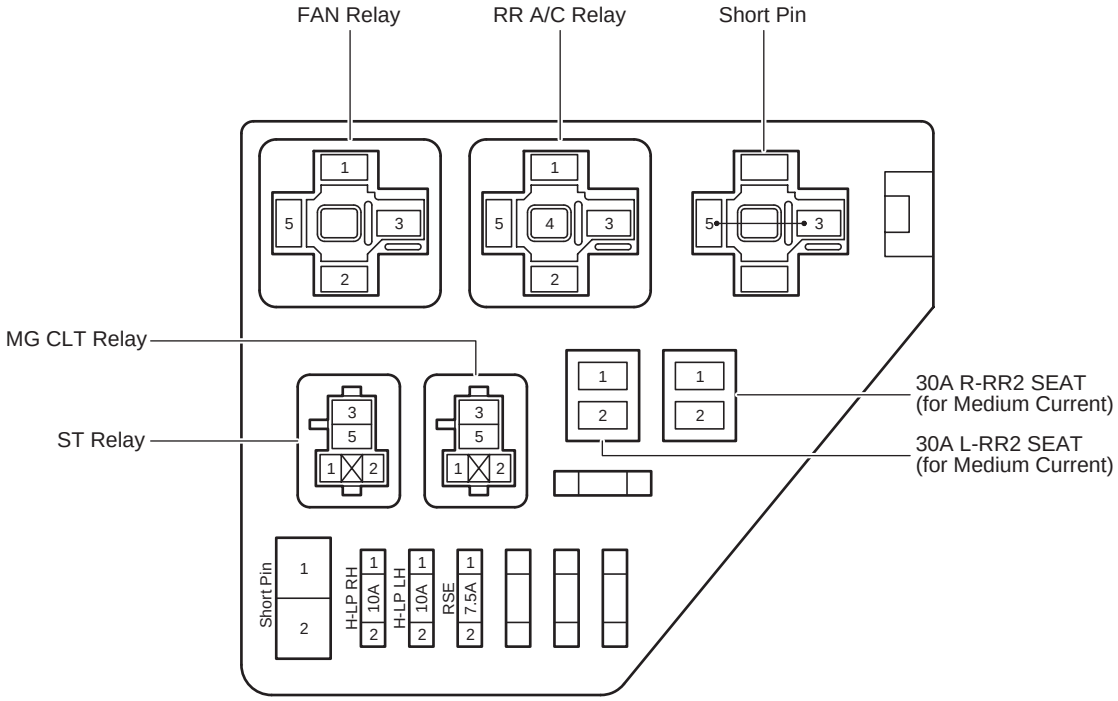

(Manual A/C)

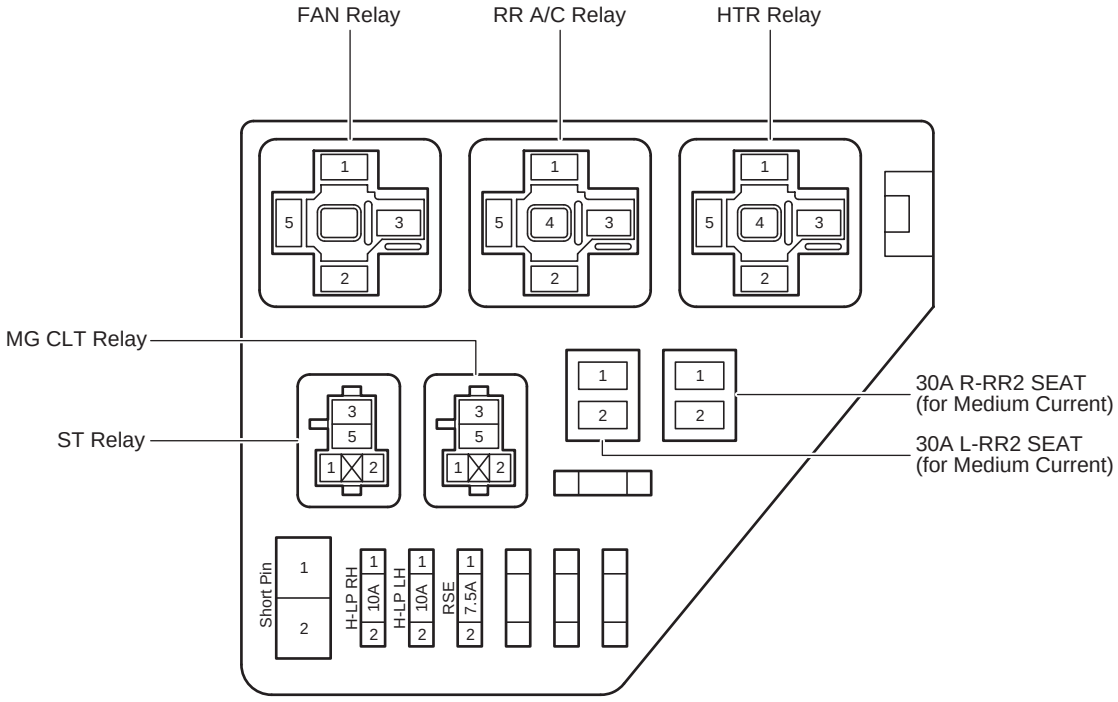

④ : R/B No.4	Engine Compartment Left (See Page 20)

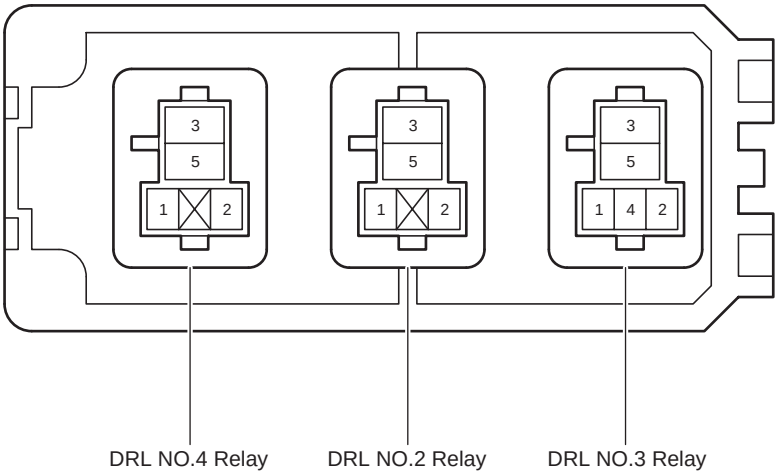

⑤ : R/B No.5	Engine Compartment Left (See Page 20)

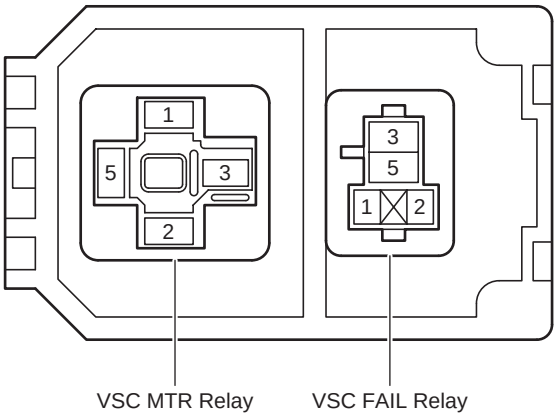

F RELAY LOCATIONS

⑥ : R/B No.6	Engine Compartment Left (See Page 20)

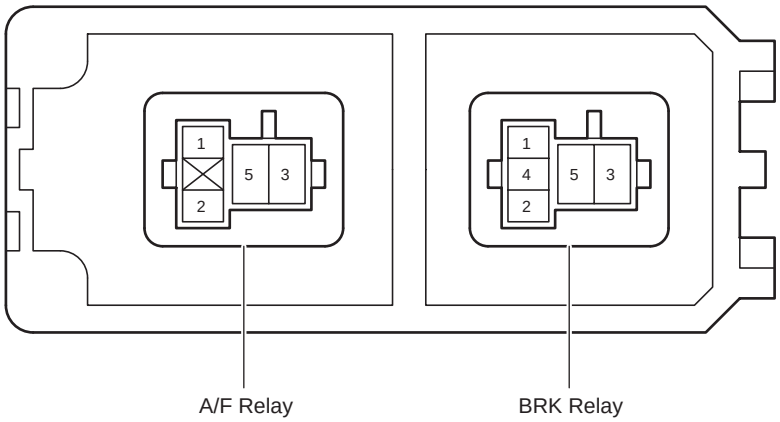

Fuse Box	Right Kick Panel (See Page 20)

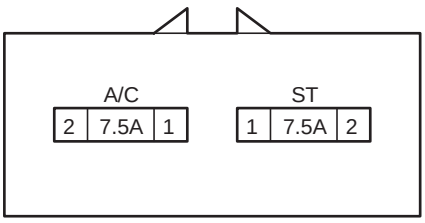

: Driver Side J/B	Lower Finish Panel (See Page 20)

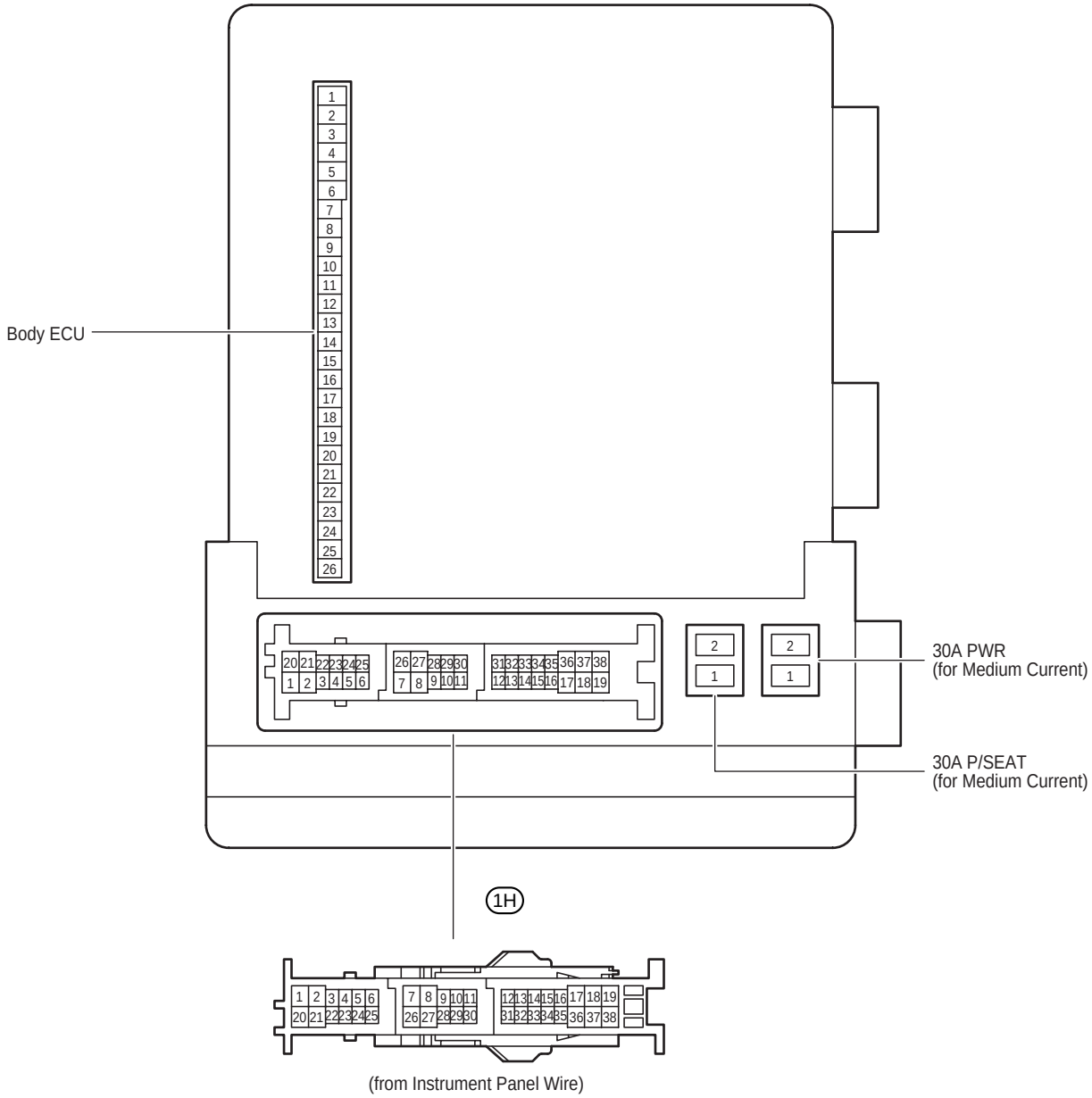

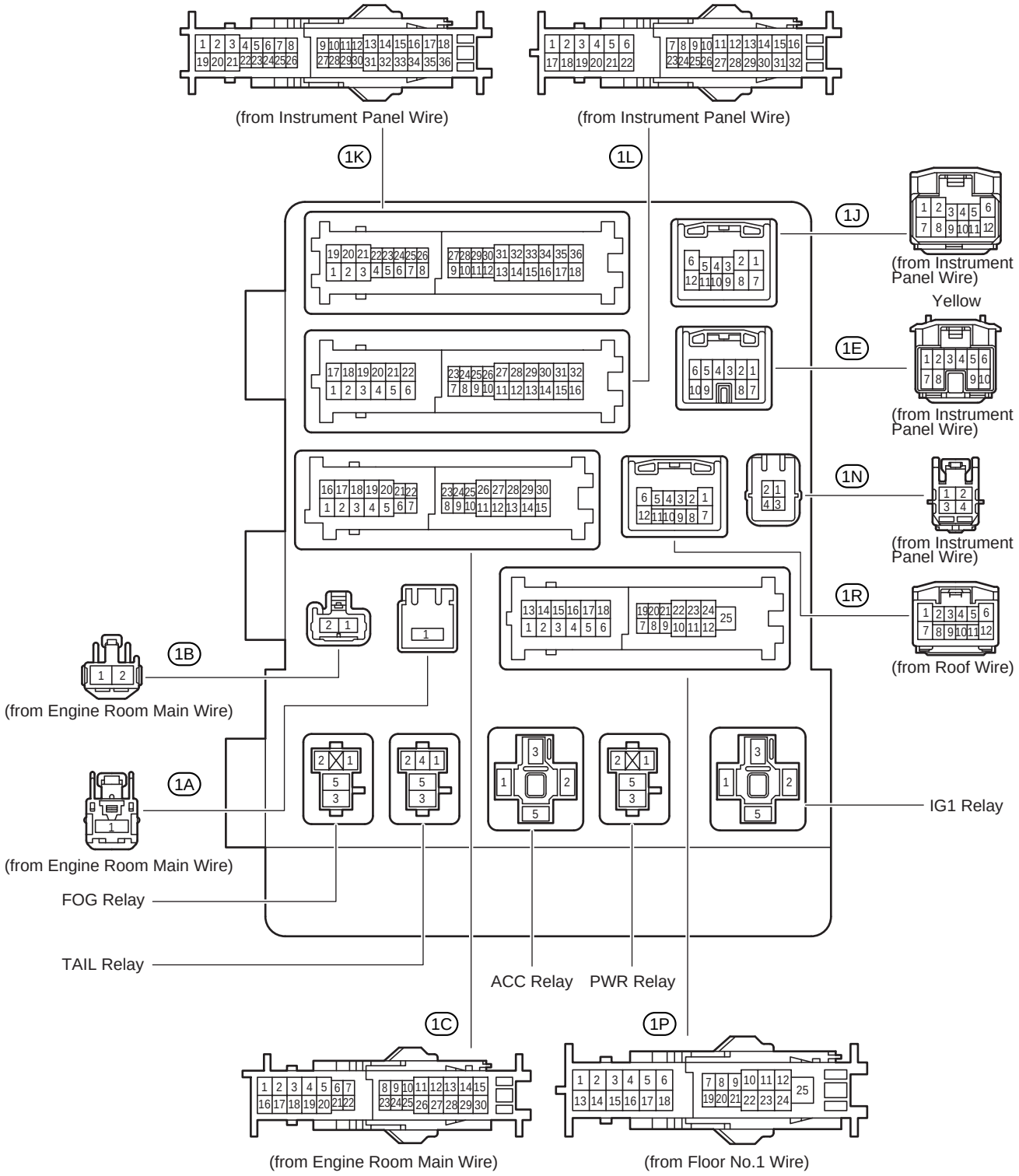
(from Instrument Panel Wire)
(from Instrument Panel Wire)
1K
1L
1J
(from Instrument Panel Wire)
Yellow
1E
(from Instrument Panel Wire)
1N
(from Instrument Panel Wire)
1R
(from Roof Wire)
1B
(from Engine Room Main Wire)
1A
(from Engine Room Main Wire)
IG1 Relay
FOG Relay
TAIL Relay
ACC Relay
PWR Relay
1C
1P
(from Engine Room Main Wire)
(from Floor No.1 Wire)

⬭ : Driver Side J/B	Lower Finish Panel (See Page 20)

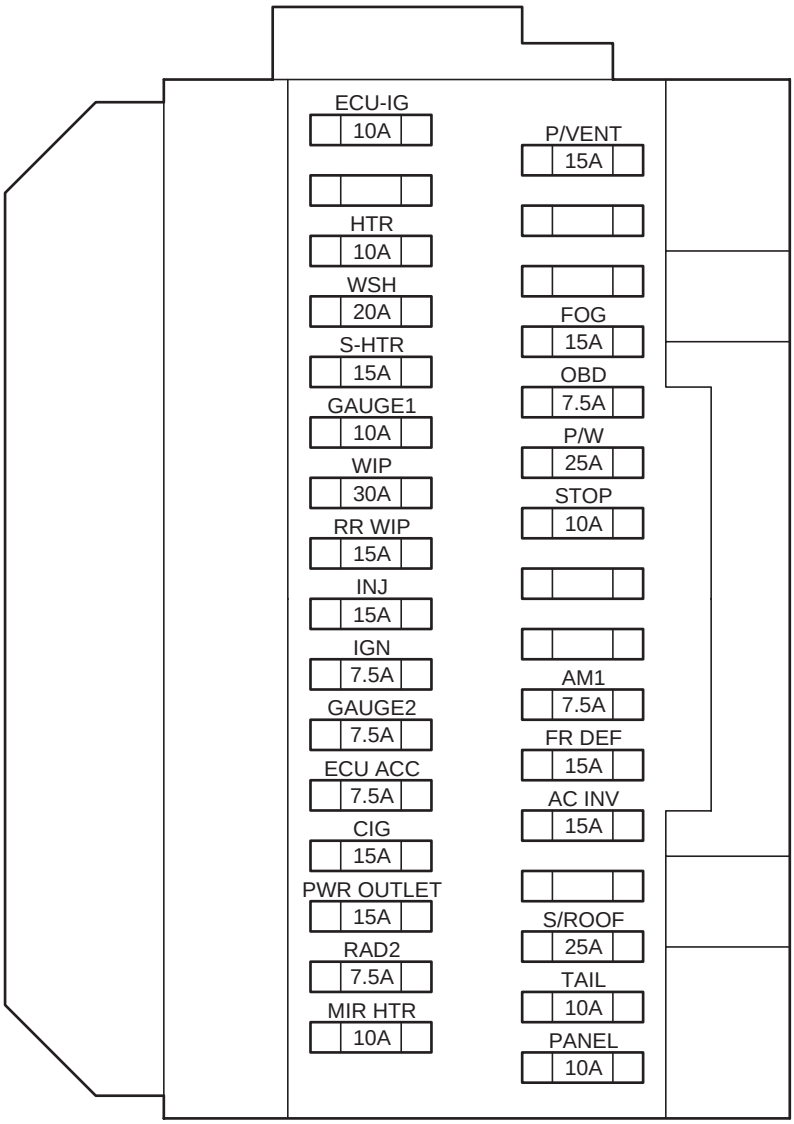

[Driver Side J/B Inner Circuit]

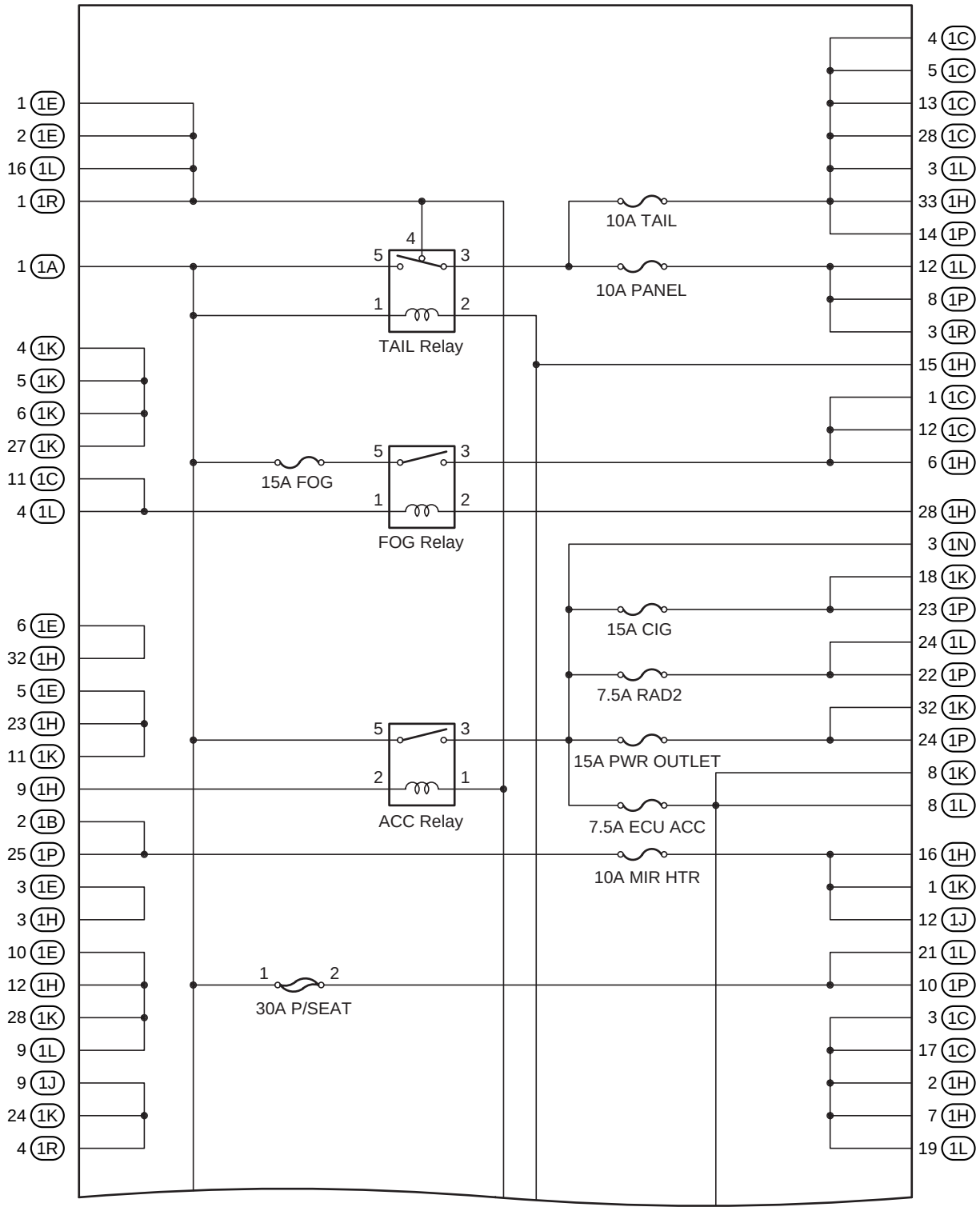

(Cont. Next Page)

[Driver Side J/B Inner Circuit]

(Cont'd)

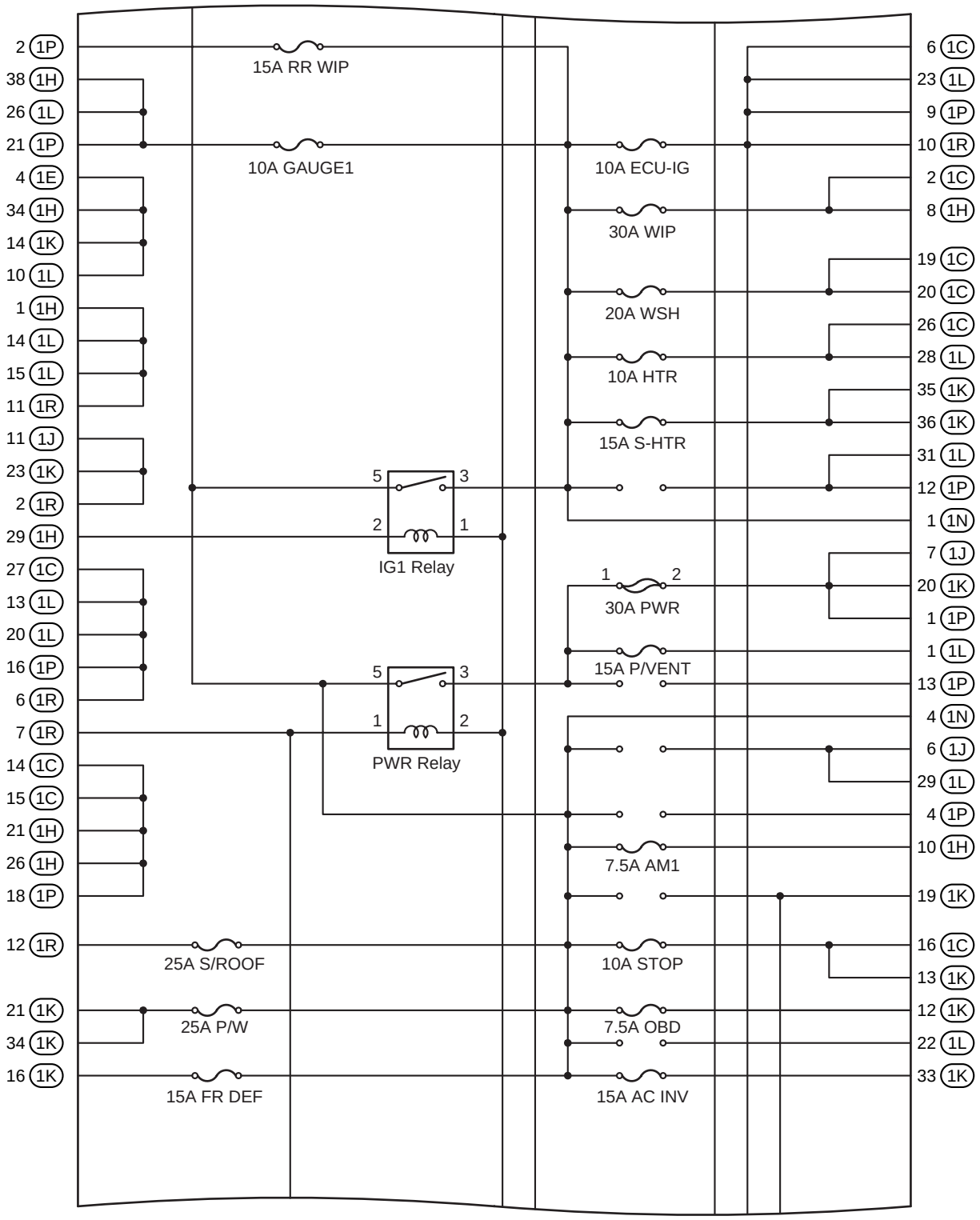

(Cont. Next Page)

(Cont'd)

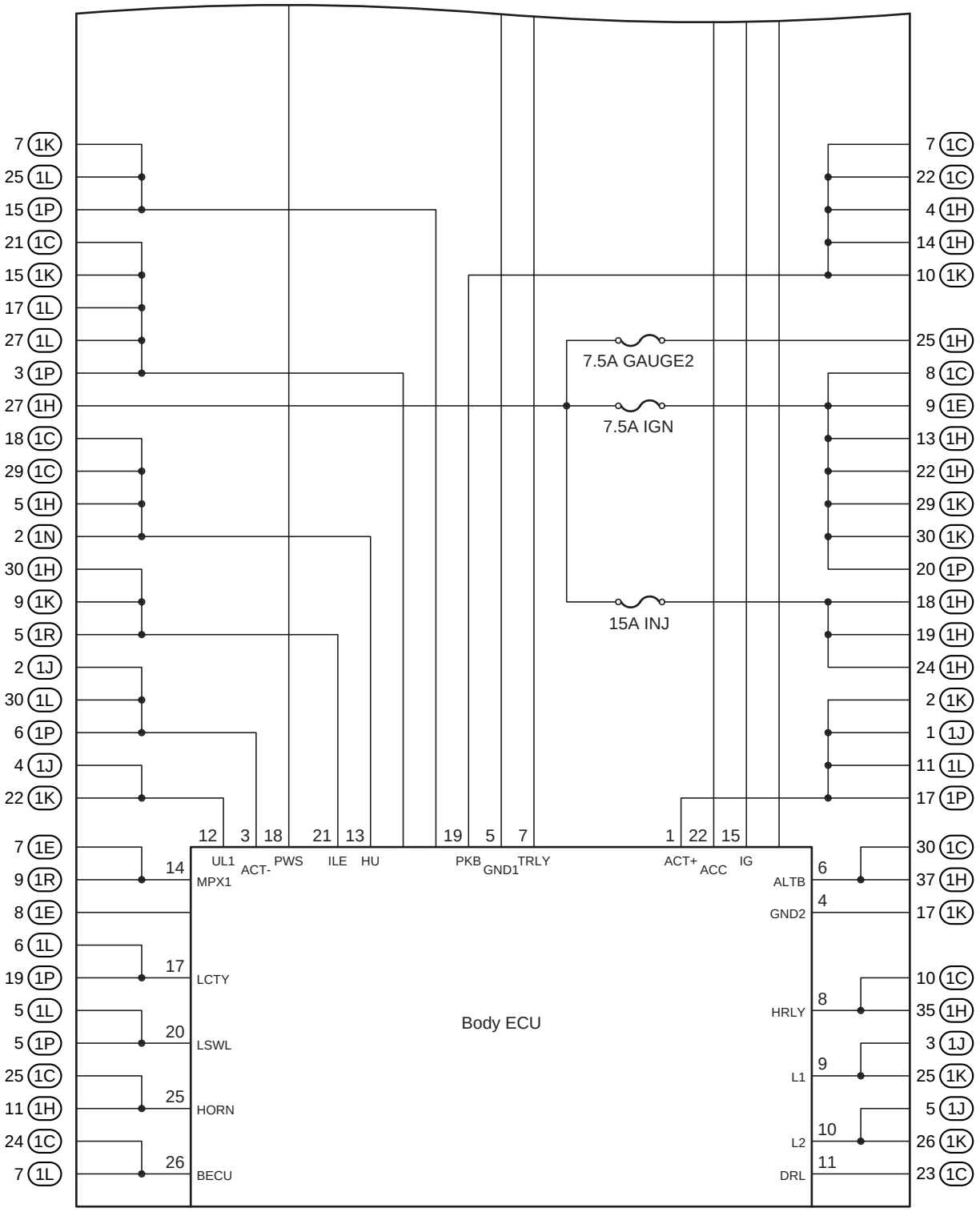
7 1K
25 1L
15 1P
21 1C
15 1K
17 1L
27 1L
3 1P
27 1H
18 1C
29 1C
5 1H
2 1N
30 1H
9 1K
5 1R
2 1J
30 1L
6 1P
4 1J
22 1K
7 1E
9 1R
8 1E
6 1L
19 1P
5 1L
5 1P
25 1C
11 1H
24 1C
7 1L
7 1C
22 1C
4 1H
14 1H
10 1K
25 1H
8 1C
9 1E
13 1H
22 1H
29 1K
30 1K
20 1P
18 1H
19 1H
24 1H
2 1K
1 1J
11 1L
17 1P
30 1C
37 1H
17 1K
10 1C
35 1H
3 1J
25 1K
5 1J
26 1K
23 1C
7.5A GAUGE2
7.5A IGN
15A INJ
12 3 18 21 13 19 5 7 1 22 15
14 UL1 ACT- PWS ILE HU PKB GND1 TRLY ACT+ ACC IG
MPX1
17
LCTY
20
LSWL
25
HORN
26
BECU
Body ECU
6
ALTB
4
GND2
8
HRLY
9
L1
10
L2
11
DRL